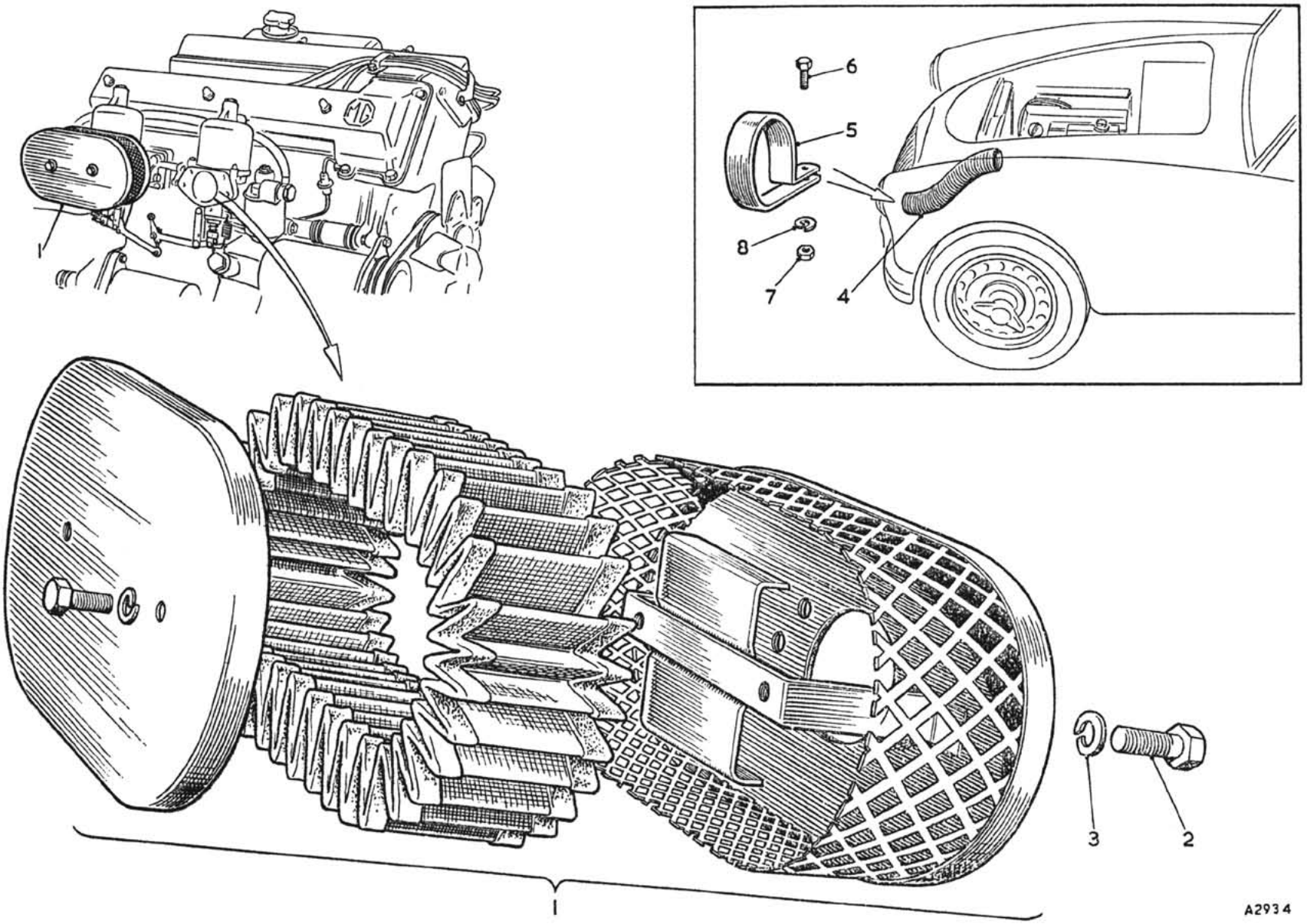
1
6
5
8
7
4
3
2
1
A2934

Item No.	DESCRIPTION	Commencing (C) 501 Part Number	Commencing (C) 501 Illus. No.	Qty. per Vehicle RHD	Qty. per Vehicle LHD	Unit of Issue	Type of Vehicle	MODIFICATIONS New Part Number	MODIFICATIONS Change Point	MODIFICATIONS Amdt. No.	REMARKS
	AIR CLEANER										
1	**Cleaner—air**	**AHH5831**	**DC1**	2	2			**AHH5960**	**Com. (C) 2468**		**Always supply AHH5960 prior to (C) 2468**
2	Screw fixing cleaner	HZS0506	DC2	4	4			HZS0507			
3	Washer for screw (spring)	LWZ205	DC3	4	4	24					
	AIR INTAKE HOSE										
4	**Hose—air intake**	**AHH5394**	**DC4**	1	1						
5	Clip for hose	AHH5714	DC5	1	1						
6	Screw fixing clip	PMZ0316	DC6	1	1						
7	Nut for screw	FNZ103	DC7	1	1						
8	Washer for nut (spring)	LWZ203	DC8	1	1						