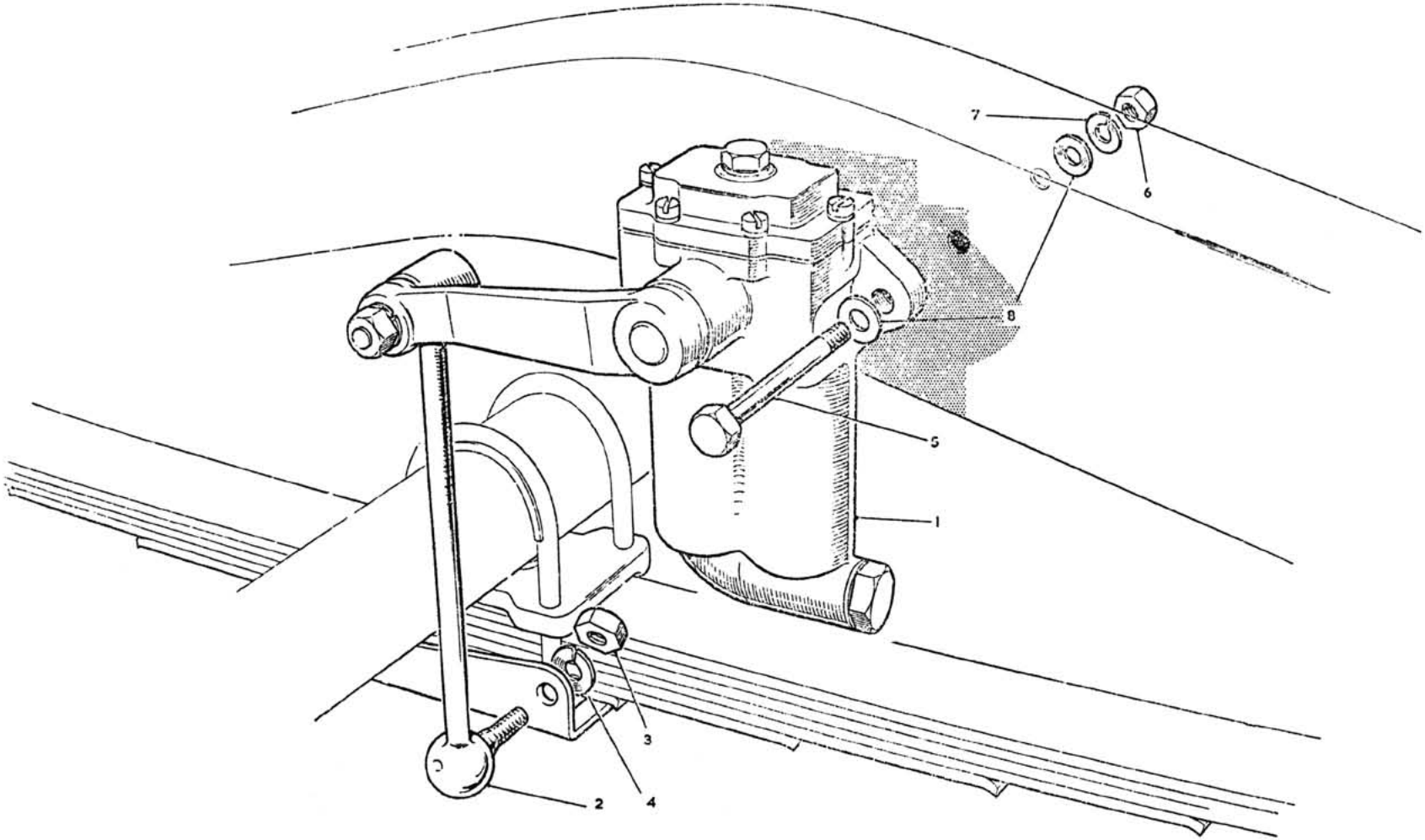

A2140

Item No.	DESCRIPTION	Commencing (C) 501 Part Number	Commencing (C) 501 Illus. No.	Qty. per Vehicle RHD	Qty. per Vehicle LHD	Unit of Issue	Type of Vehicle	MODIFICATIONS New Part Number	MODIFICATIONS Change Point	MODIFICATIONS Amdt. No.	REMARKS
	REAR SHOCK ABSORBER										
1	**Shock absorber—rear—R.H.**	**AHH5029**		1	1						
2	**Shock absorber—rear—L.H.**	**AHH5030**	**L1**	1	1						
3	Link—shock absorber	97H2031	L2	2	2						
4	Nut—link to bracket	FNZ108	L3	2	2						
5	Washer for nut (spring)	LWN208	L4	2	2						
6	Bolt—shock absorber to frame	HBZ0728	L5	4	4						
7	Nut for bolt	FNZ107	L6	4	4						
8	Washer for nut (spring)	LWZ207	L7	4	4						
9	Washer for nut (plain)	PWZ107	L8	8	8						